AS COMES OUT OF THE MACHINE

(WHELL 8/RS/5006)

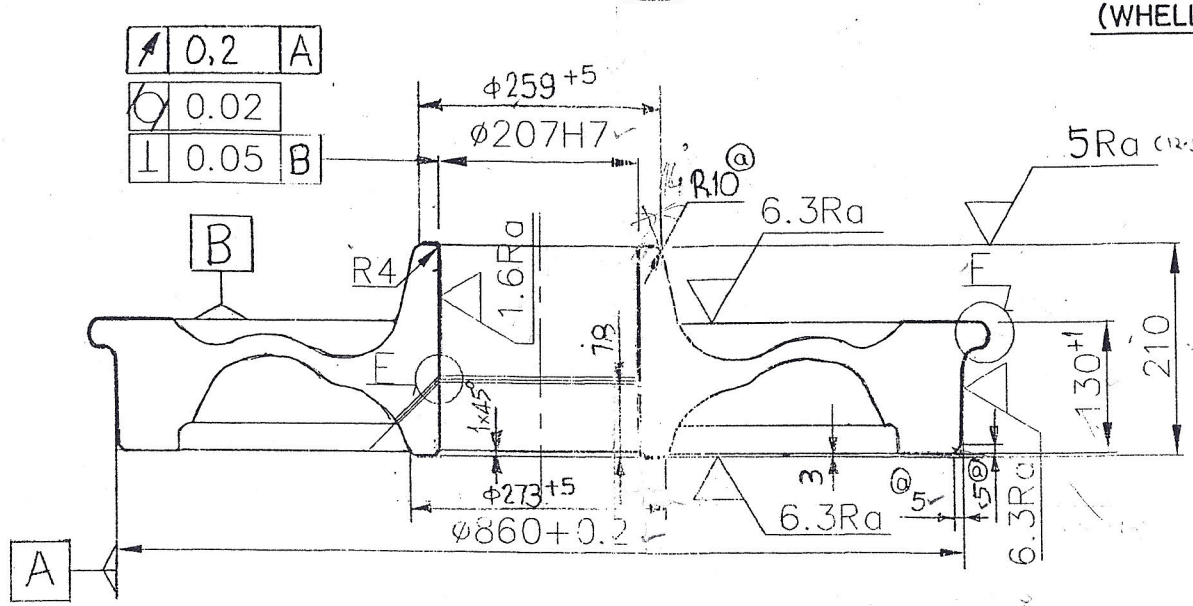

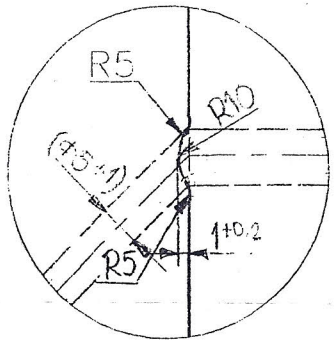

DETAIL—E

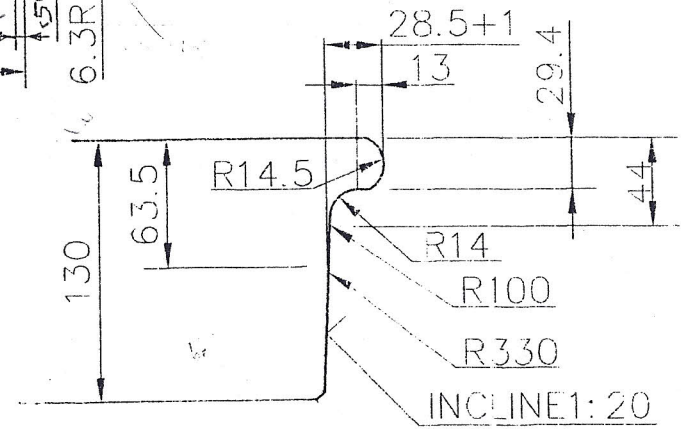

DETAIL—F

on Radius only

Item	Designation and Final Dimensions	Material	Qty.	Item No.	Remarks

Revised as per customer Tax dt 9.4.05 — 13/4 Sekhar

Alterations | Drawn | Date | Name | Sig. | Ass/ No.

Designation: COMP.INSPECTION DRG. | Scale 1:5 | Drawn 27-12-04 SEKHAR | Checked CMF | Section SPM Tools | Projection

HMT MACHINE TOOLS LIMITED HYDERABAD

VT406—L—3—2/4a

Retractable Location | Fixed Resting | Clamping | Adj Rest & Locking | Location & Clamping | Fixed Location | * Customer to Confirm | Orientation

C/PROG FILES/ACAD2000/TOOLS/VT406-L-3 2.4

Kind attn. DSM/RSW

AS PRESENTED TO THE MACHINE

(WHELL 8/RS/5006.)

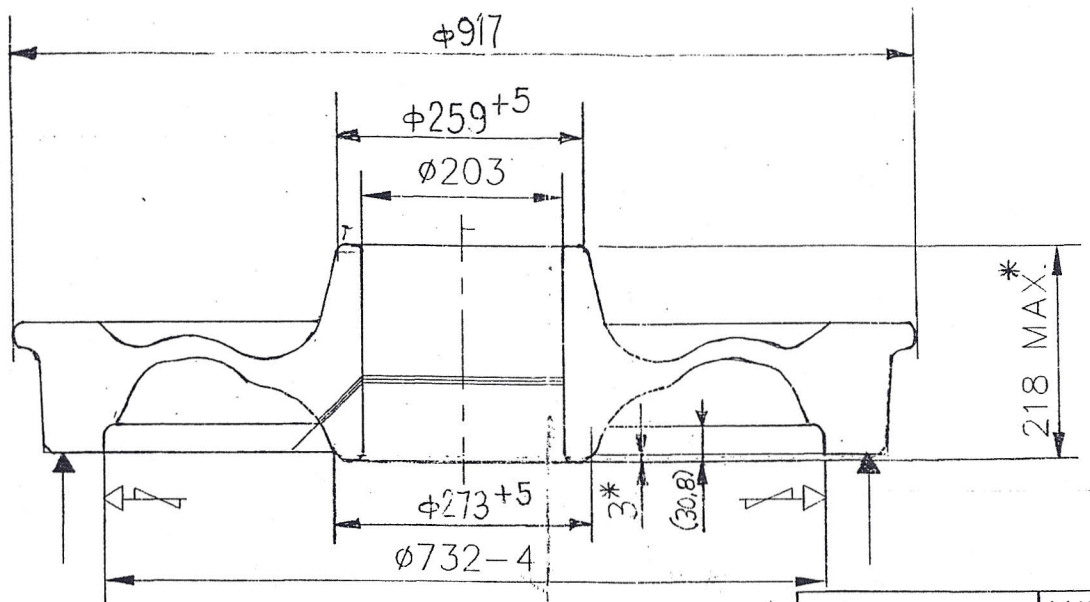

CUSTOMER	M/S D.M.R.C. NEW DELHI.	
PROJECT No.	SPL – 2243	
COMPONENT	WHELL	
COMPONENT No.	8/RS/5006	ϕ1000
COMP. MATL.	FORGED STEEL 360 BHN	

Designation and Final Dimensions	Material	Qty.	Stock No.	Remarks

revised as per customers fax dt 9.4.05 — (a) 22/06 Sekhar

Alterations | Ctd. No. | Date | Name | Qty | Assy No.

Designation: COMP.INSPECTION DRG. | Scale 1:5 | Drawn 27-12-04 SEKHAR | Checked CHR | Section SPMTools | Projection

HMT MACHINE TOOLS LIMITED HYDERABAD

VT406-L-3-1/4a

Retractable Location	Clamping	Location & Clamping	* Customer to Confirm
Fixed Resting	Adj.Rest&Locking	Fixed Location	Orientation

C/PROG FILES/ACAD2000/TOOLS/VT406-L-3